BODY, ROOF - Z26NEY99A4/B4/A6/B6 (C750890)

2026 RZR - RZR XP S 1000 ULTIMATE (R01) - Z26NEY99A4/B4/A6/B6

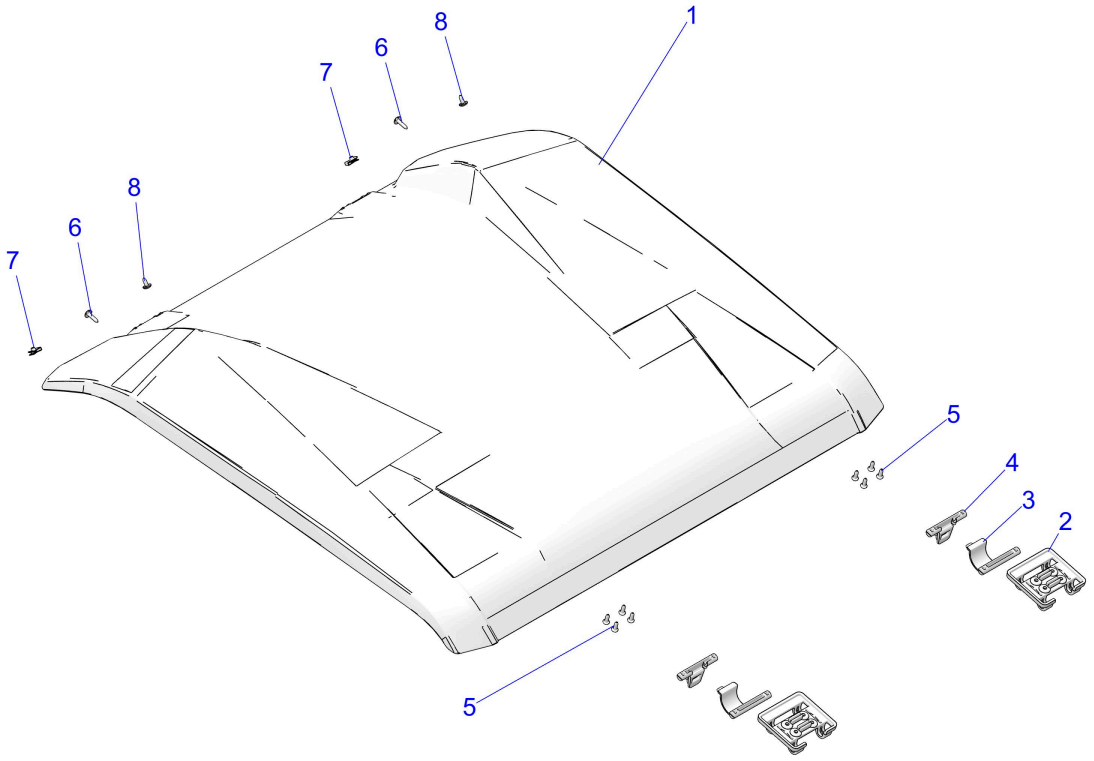

© 2025 Polaris Industries Inc.

C750890

Reference #	*Part#*	*Description*	*Quantity*
	2208301	HDWR-ROOF,POLY,RZR [INCL. 2-8 & SEAL]	1
1	2884553	K-ROOF,POLY,RZR	1
2	5455622	CLAMP-BASE,ROOF,RZV	2
3	5455623	CLAMP-HOOP,ROOF,RZV	2
4	5455624	CLAMP-LATCH,ROOF,RZV	2
5	7519045	SCR-TX TRUSS-#14X3/4, HI/LO ZBK	8
6	7519650	SCR-TXTH-M6X1.0X25 ZFB	2
7	7081305	CLIP-U SPEED NUT	2
8	7518936	SCR-M6X1X16 TR/TX-M	2

Copyright 1996-2026 Polaris Industries U.S.A All rights reserved.